California Faucets®

Body Sprays

Self-Cleaning Jet Body Spray

BS-60
BS-65
BS-70
BS-77
BS-85

Features

- *Available in 28 finishes including 13 PVD finishes*
- *All brass construction*

BS-65-PC shown

Codes/Standards

Product meets or exceeds the following:

- *ASME A112.18.1/CSA B125.1*

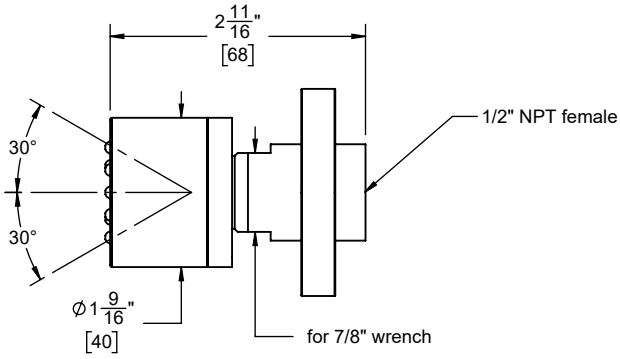

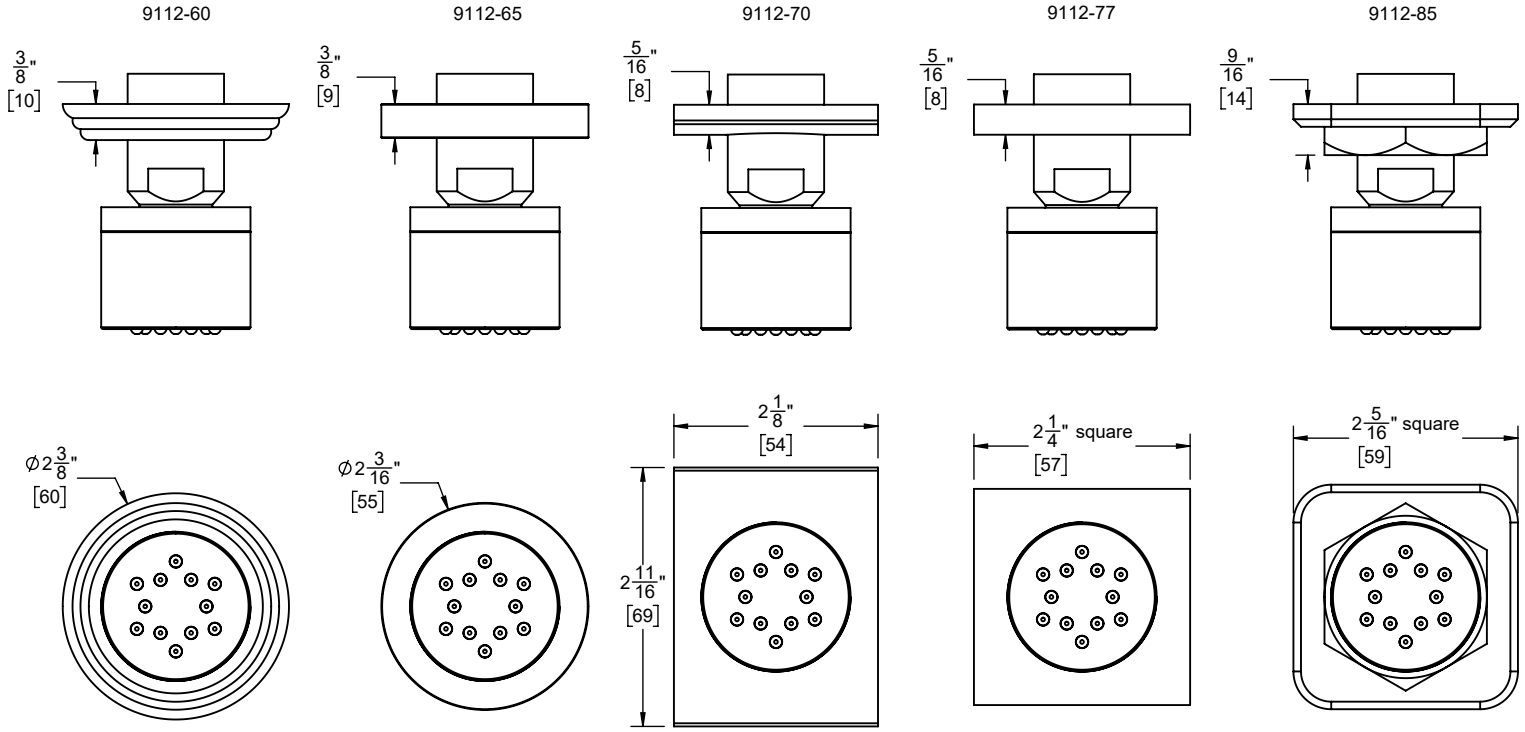

Dimensions are inches, rounded to 1/16"
[Dimensions in brackets are mm, rounded to 1mm]

Specifications subject to change without notice