AXOR

hansgrohe

Brand	hansgrohe
Art. Name	**FixFit S** Wall Outlet with Handshower Holder
Art. Nr.	26888001
Surface	chrome
Pos.	1

Product Picture

Drawing

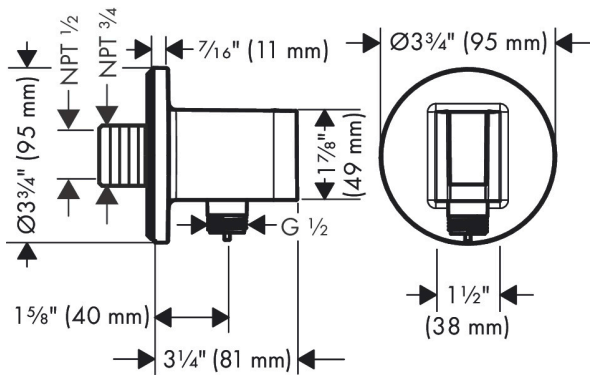

Features

- Consists of: Wall connector, Escutcheon
- Version: plastic housing with internal water supply made of plastic
- All Hansgrohe hand showers
- Wall-mounted
- Connection type: ½" NPT, ¾" NPT